Draft1.asc Draft1.raw

Draft1.raw

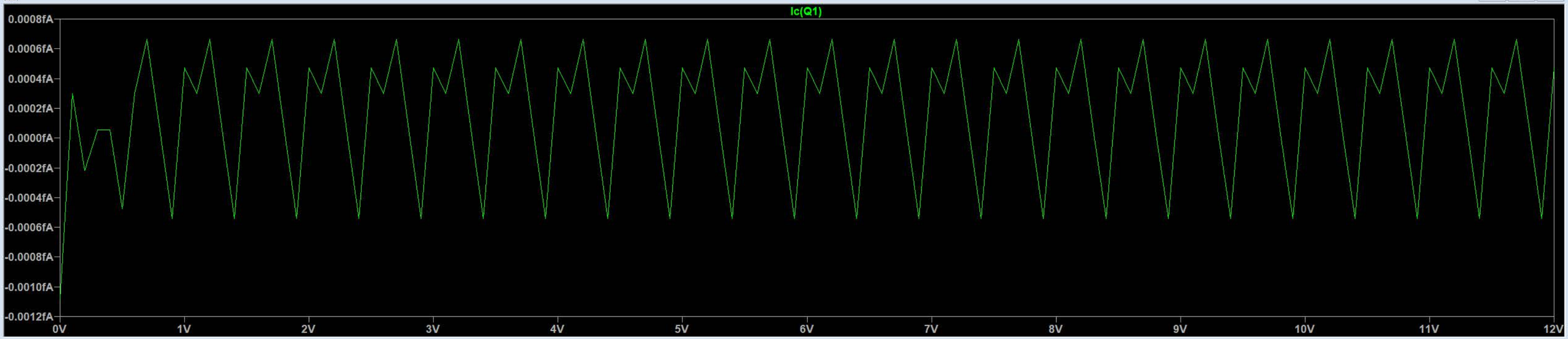

Draft1.asc

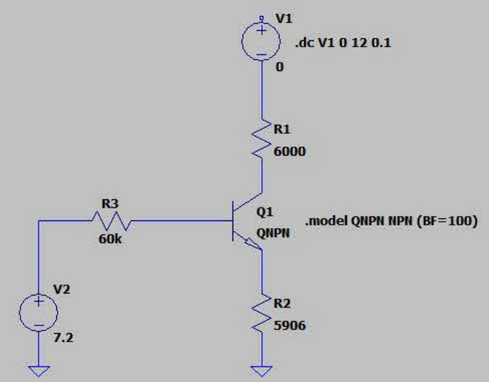

Draft1.asc Draft1.raw

Draft1.raw

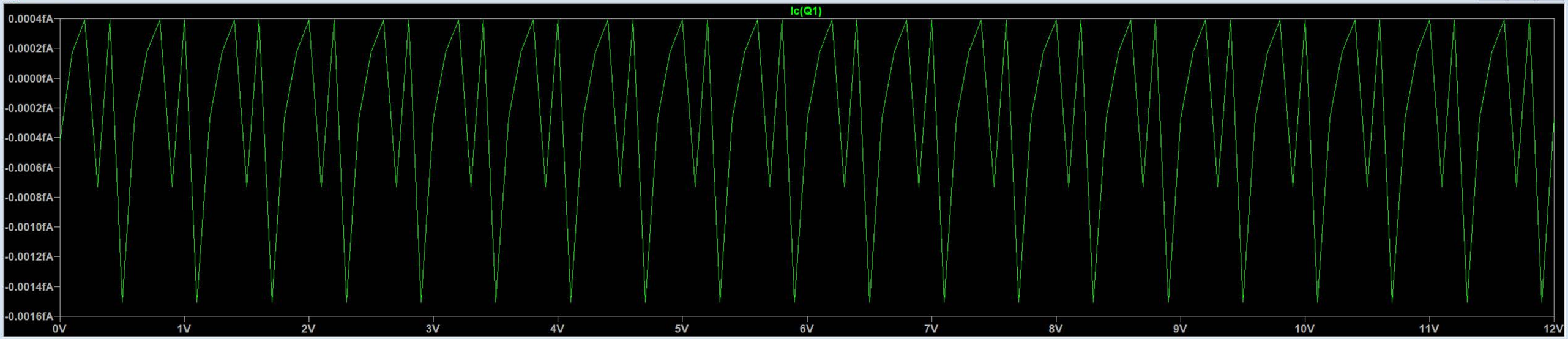

Draft1.asc

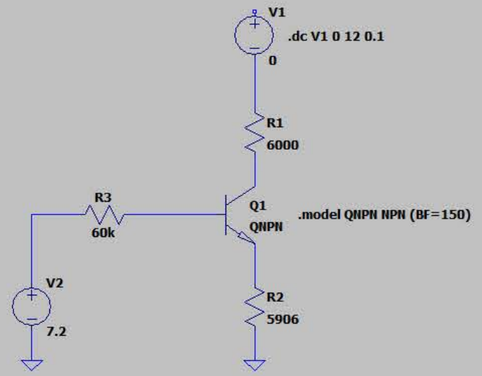

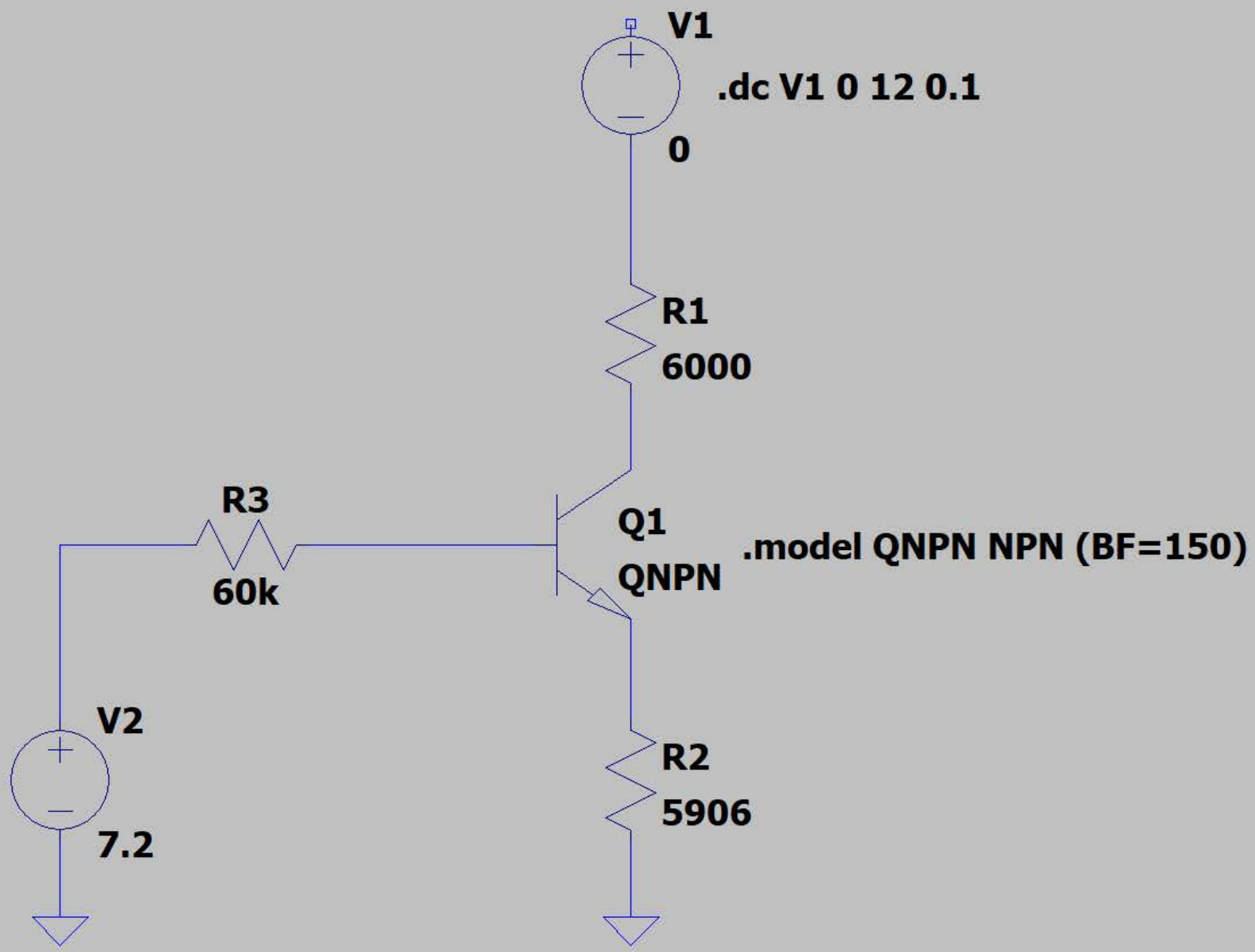
V1
.dc V1 0 12 0.1
0
R1
6000
R3
60k
Q1
QNPN
.model QNPN NPN (BF=150)
V2
7.2
R2
5906